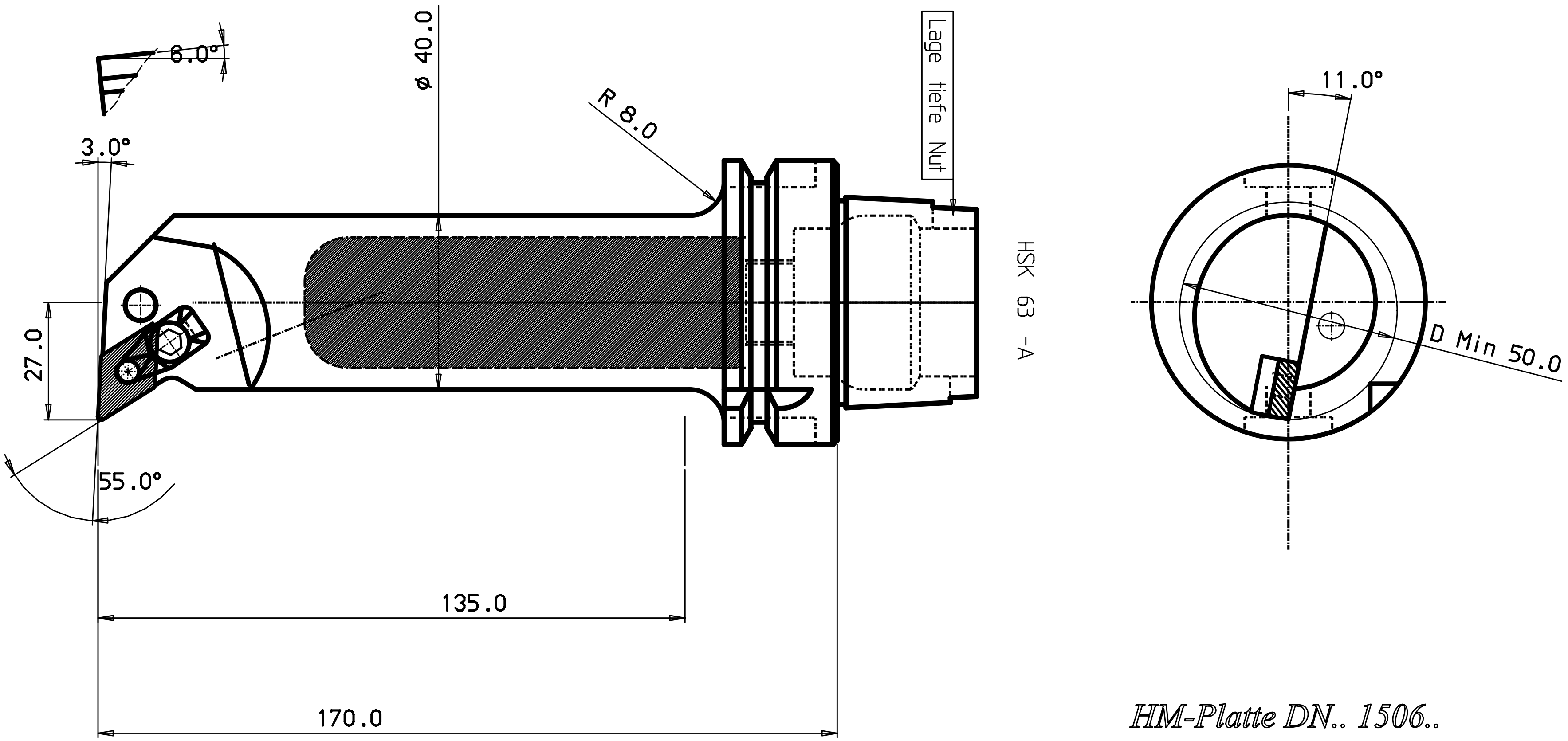

HM-Platte DN.. 1506..

ITEM	Q'NTY	DESCRIPTION	MATERIAL AND REMARKS
6	1	Spannplatte-Satz	5412 028-021
5	1	Schraube	174.3-830
4	1	Rohrstift	174.3-861
3	1	Unterlage	171.35-855
2	1	Knihebel	174.3-847M

Tolerance systems acc to ISO
Surface roughness Ra um

Where tolerance not stated:
For threds SS-iso 965/3
For dimensions SS 715 Medium

Dimension	Tol	Angle (Shortest adjacent side in mm)	Tol
-6	±0.10	10	± 1°
(6) - 30	±0.20	(10) - 50	± 30′
(30) - 120	±0.30	(50) -120	± 20′
(120) - 315	±0.50	(120) -	± 10′
(315) - 1000	±0.80		

MOD	LOCATION	CHANGE REFERENCE	DATE	SIGN

CATEGORY	DESIGNED	DRAWN	CHECKED	DATE	SCALE	SUPERSEDES

TITLE

Schneidkopf

HAVRANEK

REFERENCE

MODIFICATION A B C D E F G H J K L M N P R S T U V X Y Z

DESIGN OFFICE | DRAWING NUMBER

HSK63A-PDUNR-2740170-15

MICROFILMED

340-CPD100-2