DESIGN OFFICE | DRAWING NUMBER

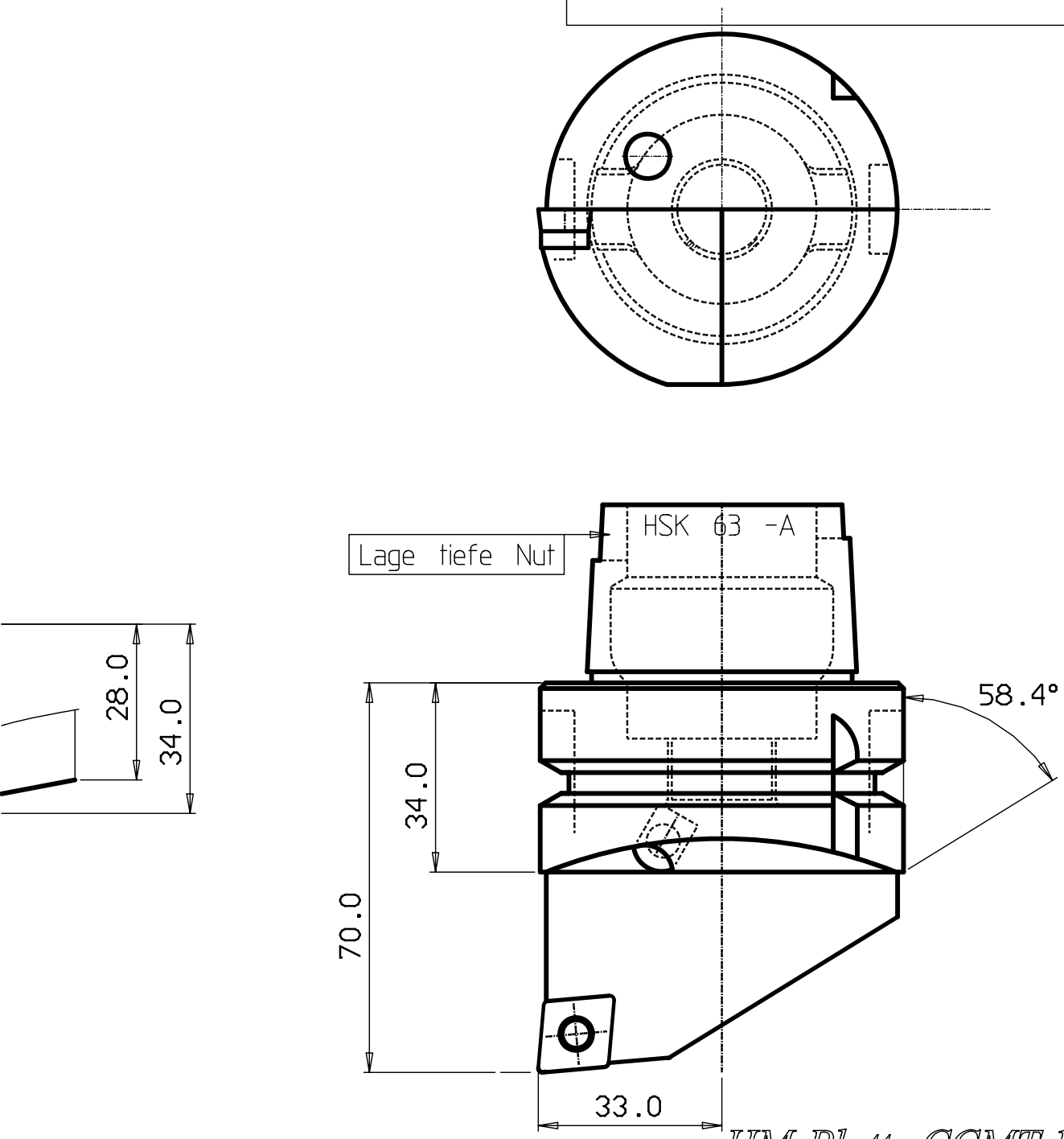

HM-Platte CCMT 120408

ITEM	Q'NTY	DESCRIPTION	MATERIAL AND REMARKS	RELATED DRAWING	ITEM	SIZE
4	1	Schraube f. Zw				
3	1	Zwischenlage				
2	1	Schraube f. Platte				
1		Schaft				

acc to ISO
Ra um

stated:
5/3
5 Medium

Angle (Shortest adjacent side in mm)	Tol
10	± 1'
(10) - 50	± 30'
(50) -120	± 20'
(120) -	± 10'

CATEGORY	DESIGNED	DRAWN	CHECKED	DATE	SCALE	SUPERSEDES

TITLE

Schneidkopf

HAVRANEK
74572 Blaufelden
Tel. 07953/97880
Fax. 07953/978811
Internet www.havranek.de
E-Mail BarbaraHavranek@aol.com

REFERENCE

MODIFICATION | A B C D E F G H J K L M N P R S T U V X Y Z

DESIGN OFFICE | DRAWING NUMBER

HSK63A-SCLCL-03370-12